Material
CuNiSi

Type	Rope (mm^2)	Wire (ø mm)	Contact wire (mm^2)
050	50	-	-
095	92 / 95	-	107
120	120	14	-
120F	-	13.2	120
150	150	15.8	-

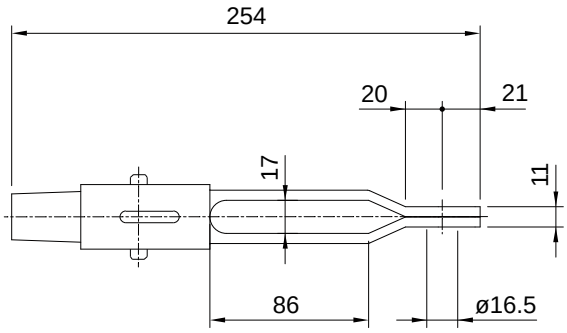

Note
Adjustable
Tensile connection for Cu, Bz or FeCu (copper-clad steel) conductors

Drawing number
417.00116

Ordering information
for rope 95 mm^2
3544.095 Automatic dead end, eye type, long