Type	A (mm)	C (mm)
066	50	66
091	75	91
145	129	145
180	164	180

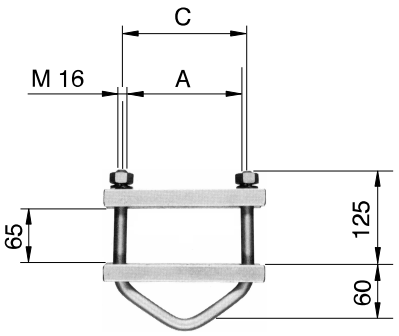

Note
Cantilever 2112
When ordering, state the cantilever length and measurement from mast axis to point of suspension.

Fasteners
Supplied complete with U-bolt.

Drawing number
414.00014

Ordering information
C = 145 mm
5312.145 Clamp for suspension on cantilever (type II)