5122

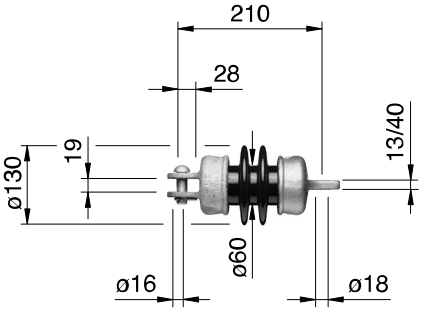

Material
Porcelain

Note
Wedge insert 5518

Tensile force
F_{min} (kN) = 60

Weight
Wt (kg) = 4,3

Drawing number
424.00053

Ordering information
5122 Solid core insulator 3 kV, 2 sheds