Material
Fe stainless

Note
With double cross switch frames.

Associated parts
Contact wire swivel clip, groove type 5557

Drawing number
442.00121
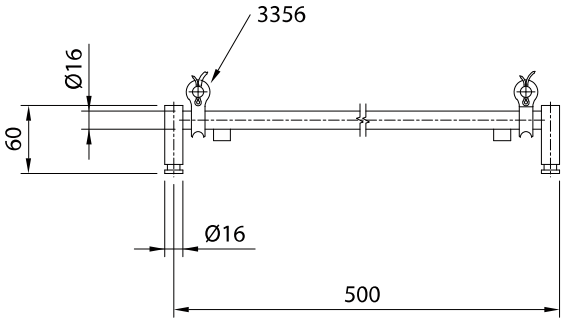
Ordering information
4244 Knuckle, long with groove