Type	Used for
1	connection to rail
2	permanent connection
3	mobile connection hole ø 13
4	mobile connection hole ø 17

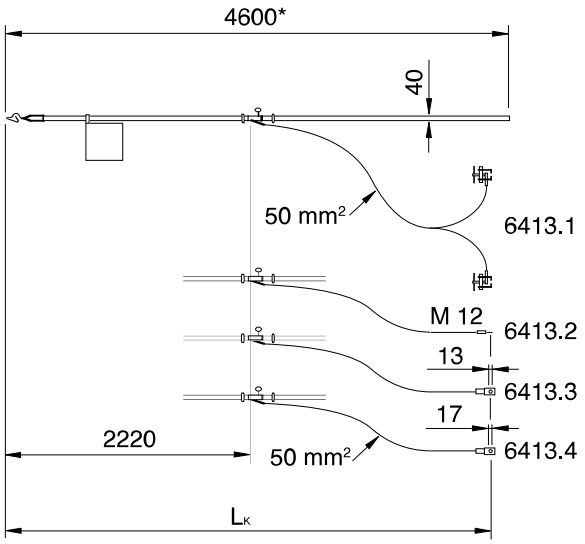

Note
Indicate length L_K when ordering.
* Other rod lengths and spare parts available on request.
Locking device
for earthing rod 6431.1 o/w
Key holder box $$productHref$6434$6434$$
Suspension arrangement 6441 o/w

Drawing number
474.00065

Ordering information
for connection to rail,
Length L_K 6,00 m
6413.1.60 Two-part earthing rod with locking